Spherical roller bearings, cylindrical and tapered bore

Principal dimensions			Basic load ratings		Speed ratings		Designation
			dynamic	static	Reference speed	Limiting speed	
d	D	B	C	C0			* SKF Explorer bearing
mm			kN		r/min		-
600	980	375	13522	23600	200	300	241/600 ECAK30/W33 *

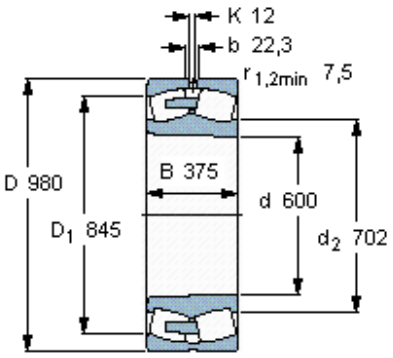

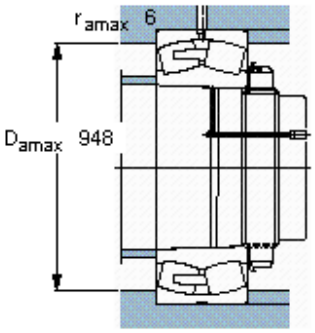

Calculation factors

e 0,37
Y_1 1,8
Y_2 2,7
Y_0 1,8

Tapered bore, taper
1: 30